SHOWER TRAY INSTRUCTION

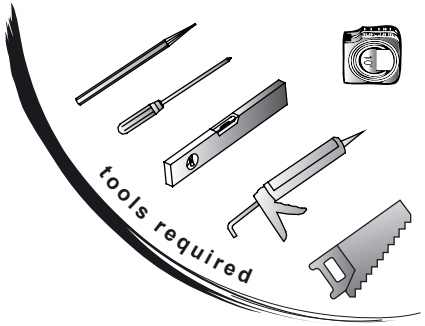

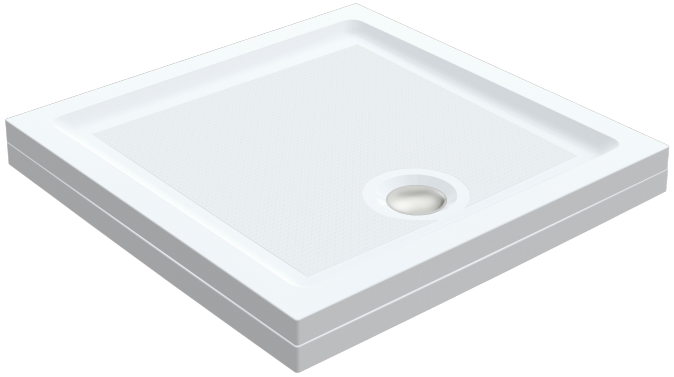

PANEL:

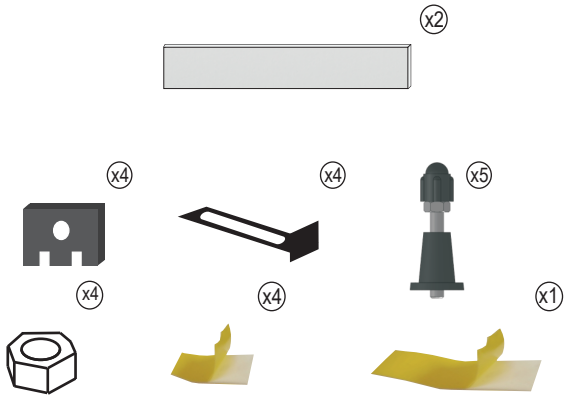
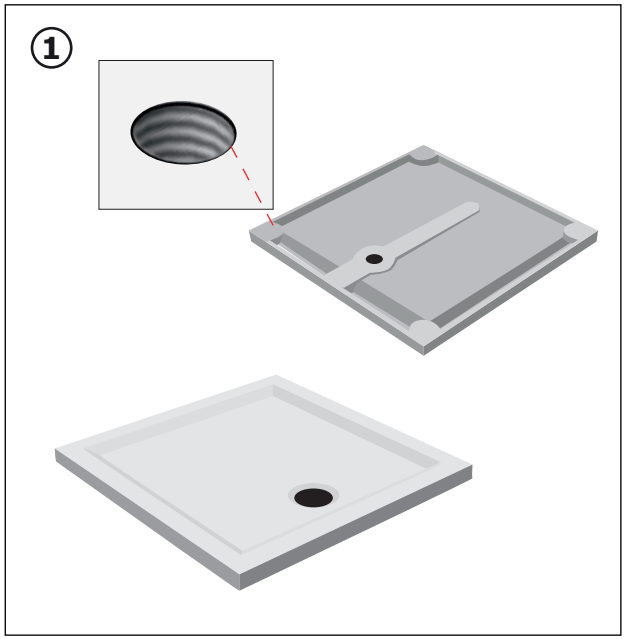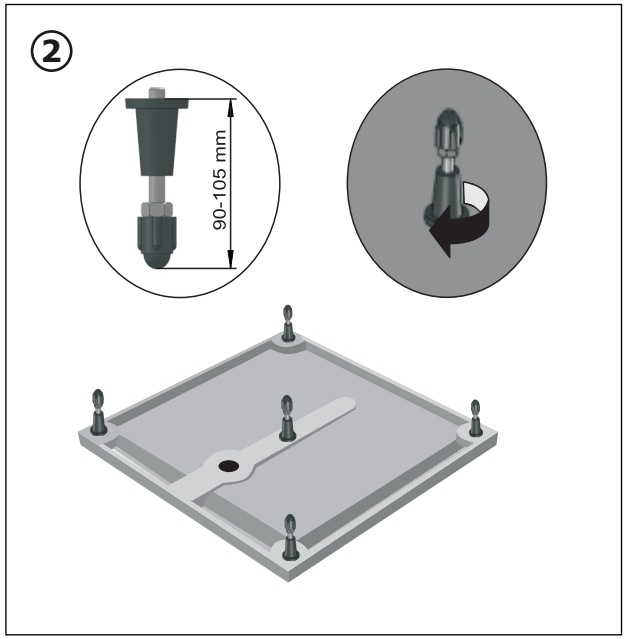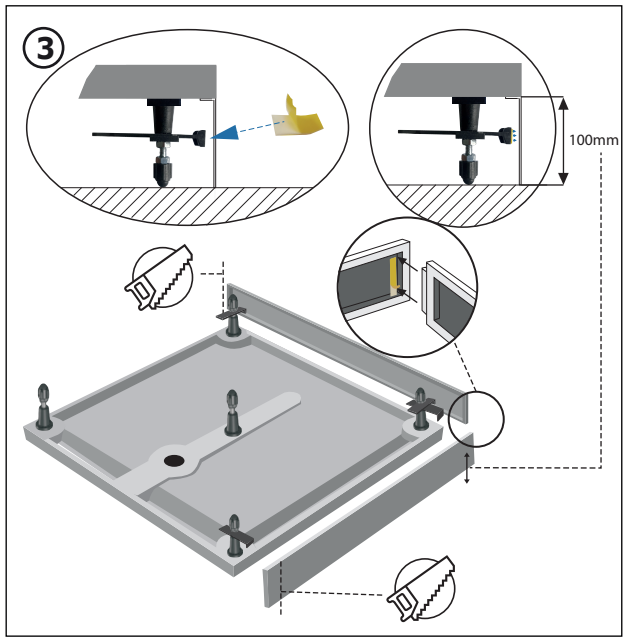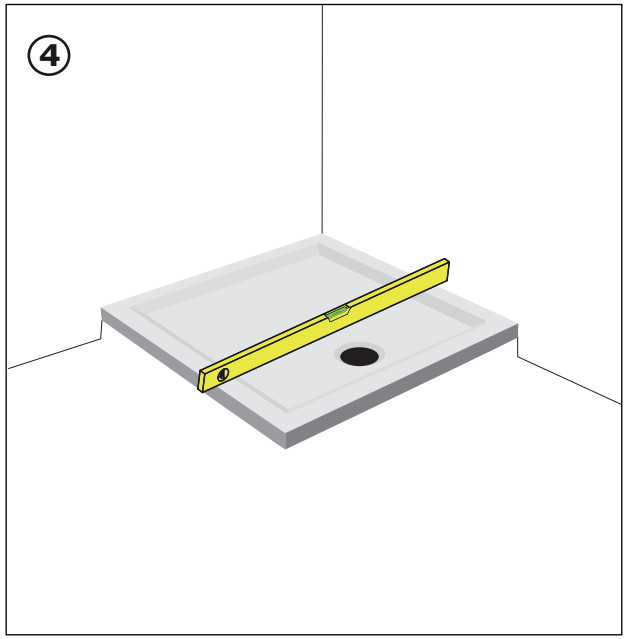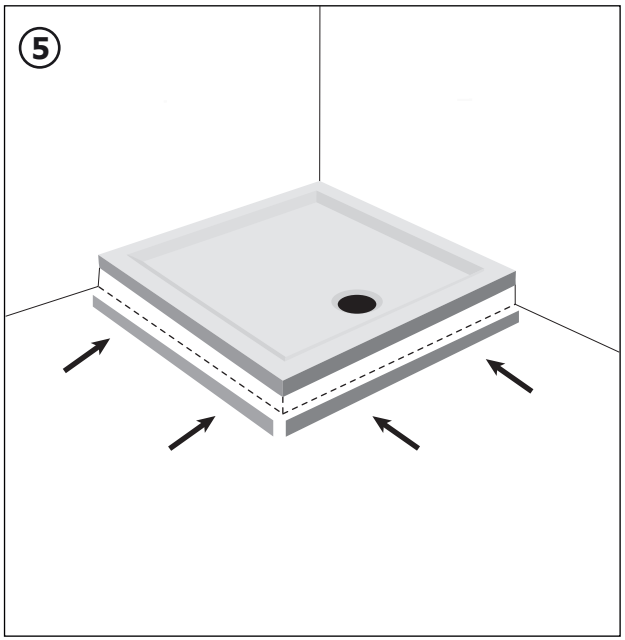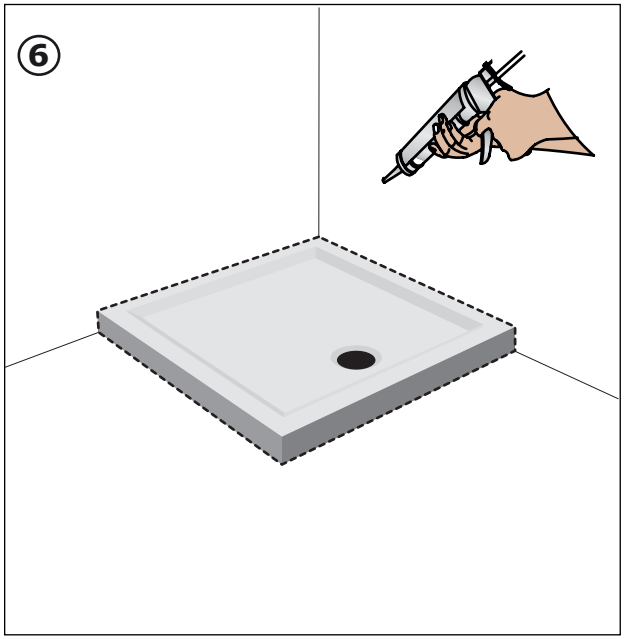
ON FLOOR INSTALLATION